DURAG GROUP

Gas burner

Heat release 15 kW to 4.5 MW

- **Regulatory compliance:** Meets local regulations, including hazardous area requirements
- **Compact + modular:** Space-saving design with a wide control range
- **Fuel-flexible + low maintenance:** Efficient, adaptable, and built for longevity
- **Trusted excellence:** High-quality burner manufacturer, with over 75 years of expertise, renowned for reliability and support



Hegwein DURAG GROUP

GAS BURNERS

Hegwein delivers industrial burner solutions designed to comply with current and local regulations, leveraging over 75 years of technical expertise. With versatile product options, Hegwein burners can be adapted to suit a wide range of industrial applications. By offering both standard models and customized, application-specific solutions, Hegwein guarantees exceptional quality and reliability.

FEATURES

- **Compact modular design**
  Streamlined for efficient integration
- **Optional integrated components**
  Spark transformer, ignition burner, flame monitor, or burner control unit
- **Electromagnetic compatibility**
  Optimized for reliable operation in various environments
- **Simplified setup process**
  Easy installation and commissioning
- **Flexible operating modes**
  Supports one-stage, multi-stage or modulating operation up to 1:10
- **High turndown ratio**
  Enhanced control over performance
- **Explosion protection**
  Certified for zone 1/21 and zone 2/22 (ATEX, IECEx, FM-Ex, PESO, KCs, EAC-Ex)
- **Extensive approvals**[1]
  DVGW, AGA, FM, EAC, SIL2/3, and cULus
- **Customizable versions**
  Tailored solutions available on request

BENEFITS

- **Fuel flexibility**
  Compatible with gas fuels of all kinds, such as low/high calorific, mixture of gases, H_2, etc.
- **Robust and reliable**
  Low maintenance, designed for maximum uptime, suitable for diverse ambient conditions
- **Integrated ionization or optical flame monitor**
  “One provider”, cost reduction, ease of integration, enhanced safety and efficiency
- **Easy service**
  Electrical and mechanical parts can be replaced independently
- **Long-term support**
  Reliable spare parts availability
- **Customizable tube lengths**
  Standard lengths up to 4 m, other lengths on request
- **Wide range of industrial applications**
  Ideal for chemical, petrochemical, thermal process plants, power plants, etc.

SIZE CONFIGURATIONS

Heat release (kW)	15	35	85	200	350	800	2.000	3.200	4.500
Tube diameter (mm)	35	50	70	88.9	133	159	219	273	325
Burner size	P	0	1	2	3	4	5	6	7

PRODUCT CONFIGURATOR

BG	No electrical components integrated
BT	Integrated spark transformer
BA	Integrated spark transformer and flame monitor for intermittent operation
BDA	Integrated spark transformer and flame monitor for continuous operation
BR	Integrated spark transformer and burner control unit for intermittent operation
BD	Integrated spark transformer and burner control unit for continuous operation

1 Approval of integrated flame monitor

TECHNICAL DATA | BURNER SIZES P, 0, 1, 2

Burner size	P	0	1	2
Nominal heat release (kW)	15	35	85	200
Flame length (mm)	Up to 200 [3,4]	Up to 250 [3,4]	Up to 300 [3,4]	400 ... 500 [3,4]
Outer tube diameter Ø (mm)	35	50	70	88.9
Outer tube length [6] (mm)	240 ... 4,000	240 ... 4,000	240 ... 4,000	240 ... 4,000
Turndown ratio (maximum)	1:5	01:10	01:10	01:10
Gas supply connection	Rp ½, left or right	Rp ½, left or right	Rp ¾, top or bottom	Rp ¾, top or bottom
Air supply connection	Rp 1, can be rotated 4x 90°	Rp 1, can be rotated 4x 90°	Rp 2, can be rotated 4x 90°	Rp 2, can be rotated 4x 90°
Ambient temperature (° C)	–30 ... +60 [1] –40 ... +80 [2]	–30 ... +60 [1] –40 ... +80 [2]	–30 ... +60 [1] –40 ... +80 [2]	–30 ... +60 [1] –40 ... +80 [2]
Protection rating	IP66	IP66	IP54 [7] IP65 [8] + IP66 [2]	IP54 [7] IP65 [8] + IP66 [2]
Power supply (VAC)	230 [1] 115/125 /250 [2]	230 [1] 115/125 /250 [2]	230 [1] 115/125 /250 [2]	230 [1] 115/125 /250 [2]
Gas operating pressure at burner inlet [3,4,5]	70	40	30	55
Air operating pressure at burner inlet [3,4,5]	25	20	20	20
Gas volume flow (Vn) [3,4] m³/h	1.5	3.5	8.5	20
Air volume flow (Vn) [3,4] m³/h	20	40	100	220

1 Standard
2 Special version
3 Natural gas
4 Under free-field conditions; for the standard conditions: atmospheric pressure (1.013 bar) and room temperature (20 °C)
5 Outer tube 1 m
6 Other dimensions on request
7 Plug connection
8 Cable connection

TECHNICAL DATA | BURNER SIZES 3, 4, 5, 6, 7

Burner size	3	4	5	6	7
Nominal heat release (kW)	350	800	2.000	3.200	4.500
Flame length (mm)	600 ... 1,000 [3,4]	300 ... 2,500 [3,4]	300 ... 3,000 [3,4]	300 ... 3,000 [3,4]	300 ... 3,000 [3,4]
Outer tube diameter Ø (mm)	135	160	220	275	325
Outer tube length [6] (mm)	240 ... 4,000	240 ... 4,000	240 ... 4,000	240 ... 4,000	240 ... 4,000
Turndown ratio (maximum)	01:10	01:10	01:10	01:10	01:10
Gas supply connection	Rp 1, bottom	Rp 2, bottom	Rp 2, bottom	Rp 2, bottom	Rp 2, bottom
Air supply connection	DN 80/PN 6, can be rotated 4x 90°	DN 100/PN 6, can be rotated 4x 90°	DN 150/PN 16, can be rotated 4x 90°	DN 200/PN 6, can be rotated 4x 90°	DN 250/PN 6, can be rotated 4x 90°
Ambient temperature (°C)	–30 ... +60 [1] –40 ... +80 [2]	–30 ... +60 [1] –40 ... +80 [2]	–30 ... +60 [1] –40 ... +80 [2]	–30 ... +60 [1] –40 ... +80 [2]	–30 ... +60 [1] –40 ... +80 [2]
Protection rating	IP54 [7] IP65 [8] + IP66 [2]	IP54 [7] IP65 [8] + IP66 [2]	IP54 [7] IP65 [8] + IP66 [2]	IP54 [7] IP65 [8] + IP66 [2]	IP54 [7] IP65 [8] + IP66 [2]
Power supply (VAC)	230 [1] 115 / 125 / 250 [2]	230 [1] 115 / 125 / 250 [2]	230 [1] 115 / 125 / 250 [2]	230 [1] 115 / 125 / 250 [2]	230 [1] 115 / 125 / 250 [2]
Gas operating pressure at burner inlet [3,4,5]	50	80	90	200	150
Air operating pressure at burner inlet [3,4,5]	20	40	25	40	40
Gas volume flow (Vn) [3,4] (m^3/h)	35	80	200	320	450
Air volume flow (Vn) [3,4] (m^3/h)	400	900	2.200	3.550	5.000

1 Standard
2 Special version
3 Natural gas
4 Under free-field conditions; for the standard conditions: atmospheric pressure (1.013 bar) and room temperature (20 °C)
5 Outer tube 1 m
6 Other dimensions on request
7 Plug connection
8 Cable connection

SERIES BA | BURNER SIZES P + 0

Burner size	A	B	C	D	E	F	G	H	J	K	L	M	N
P	435	240 ... 4,000	79	31	ø 35	Rp 1	Rp ½	98	82	80	DN 100 in accordance with DIN EN 1092-1	4x 9.5	2x 11.2
0	435	240 ... 4,000	79	31	ø 50	Rp 1	Rp ½	98	82	80		4x 9.5	2x 11.2

Dimensions in mm

SIDE VIEW | SERIES BA | BURNER SIZES P + 0

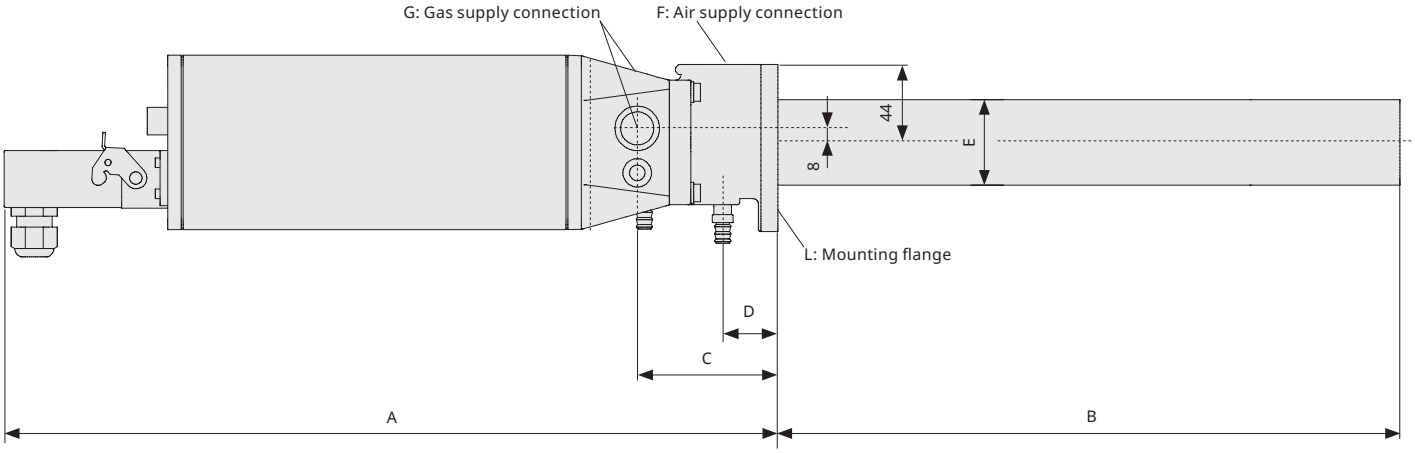

MOUNTING FLANGE | IN ACCORDANCE WITH DIN EN 1092-1

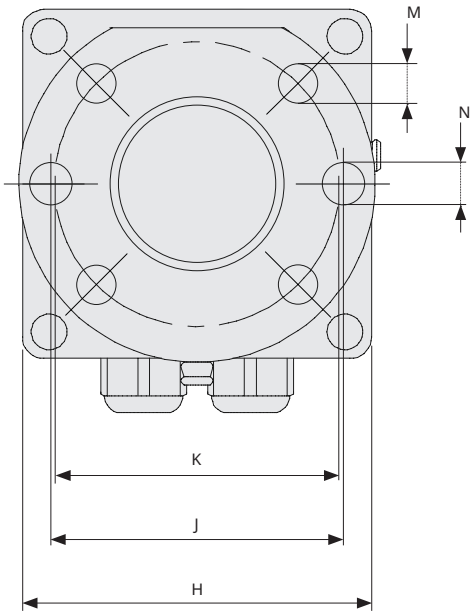

SERIES BA, BDA, BR, BD | BURNER SIZES 1, 2, 3, 4, 5

Burner size	A	B	C	D	E	F	G	H	J	K	L	M	N
1	440	240 ... 4,000	145	62	ø 70	Rp 2	Rp ¾			88	DN 80/ PN 6 DIN EN 1092-1*	4x 18	61
2	440	240 ... 4,000	145	62	ø 88,9	Rp 2	Rp ¾			88	DN 80/ PN 6 DIN EN 1092-1*	4x 18	61
3	575	240 ... 4,000	277	131	ø 133	DN 80/ PN 6 DIN EN 1092-1	Rp 1			153	DN 150/ PN 6 DIN EN 1092-1	8x 18	62
4	695	240 ... 4,000	309	155	ø 159	DN 100/ PN 6 DIN EN 1092-1	Rp 2			175	DN 150/ PN 6 DIN EN 1092-1	8x 18	62
5	833	240 ... 4,000	455	197	ø 219	DN 150/ PN 16 DIN EN 1092-1	Rp 2			223	DN 250/ PN 6 DIN EN 1092-1	12x 26	95

* Based on (material aluminum)
Dimensions in mm

SIDE VIEW | SERIES BA, BDA, BR, BD | BURNER SIZES 1, 2, 3, 4, 5

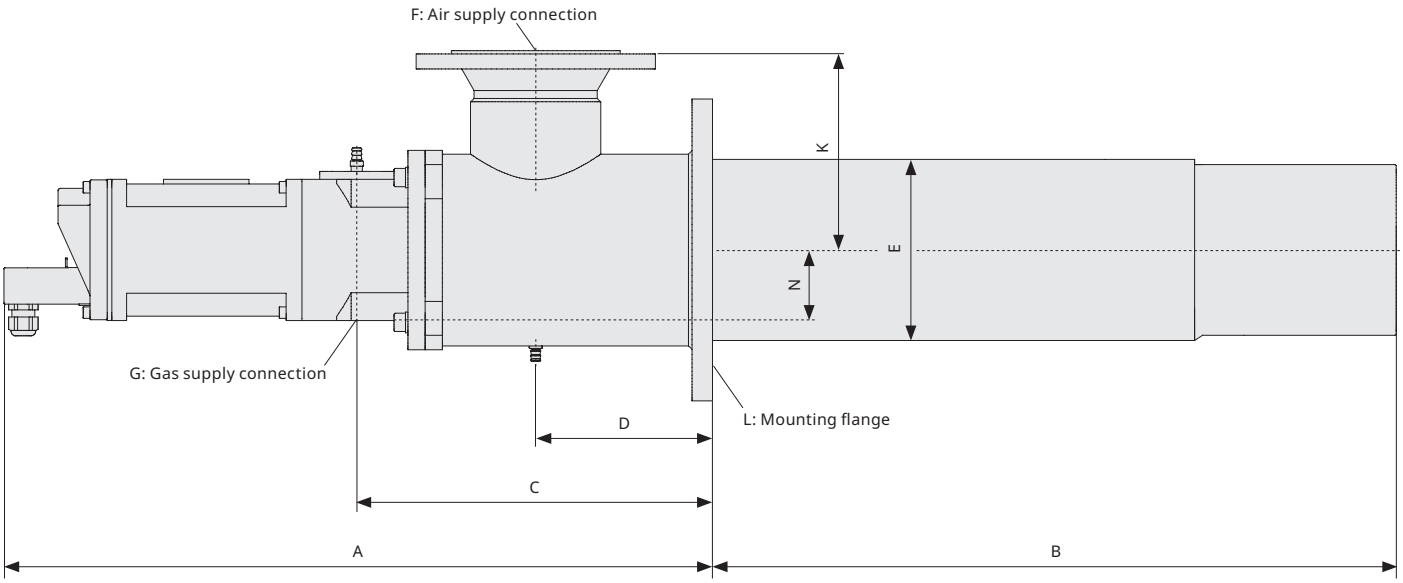

SERIES BA, BDA, BR, BD | BURNER SIZES 6 + 7

Burner size	A	B	C	D	E	F	G	H	J	K	L	M	N	O
6	Maxi-mum 913.5	240 … 4,000	525	234	ø 273	DN 200/ PN 6 DIN EN 1092-1	Rp 2			112	DN 250/ PN 6 DIN EN 1092-1		95	265
7	Maxi-mum 962	240 … 4,000	607	271	ø 325	DN 250/ PN 6 DIN EN 1092-1	Rp 2			0	DN 300/ PN 6 DIN EN 1092-1		65	301

Dimensions in mm

SIDE VIEW | SERIES BA, BDA, BR, BD | BURNER SIZES 6 + 7

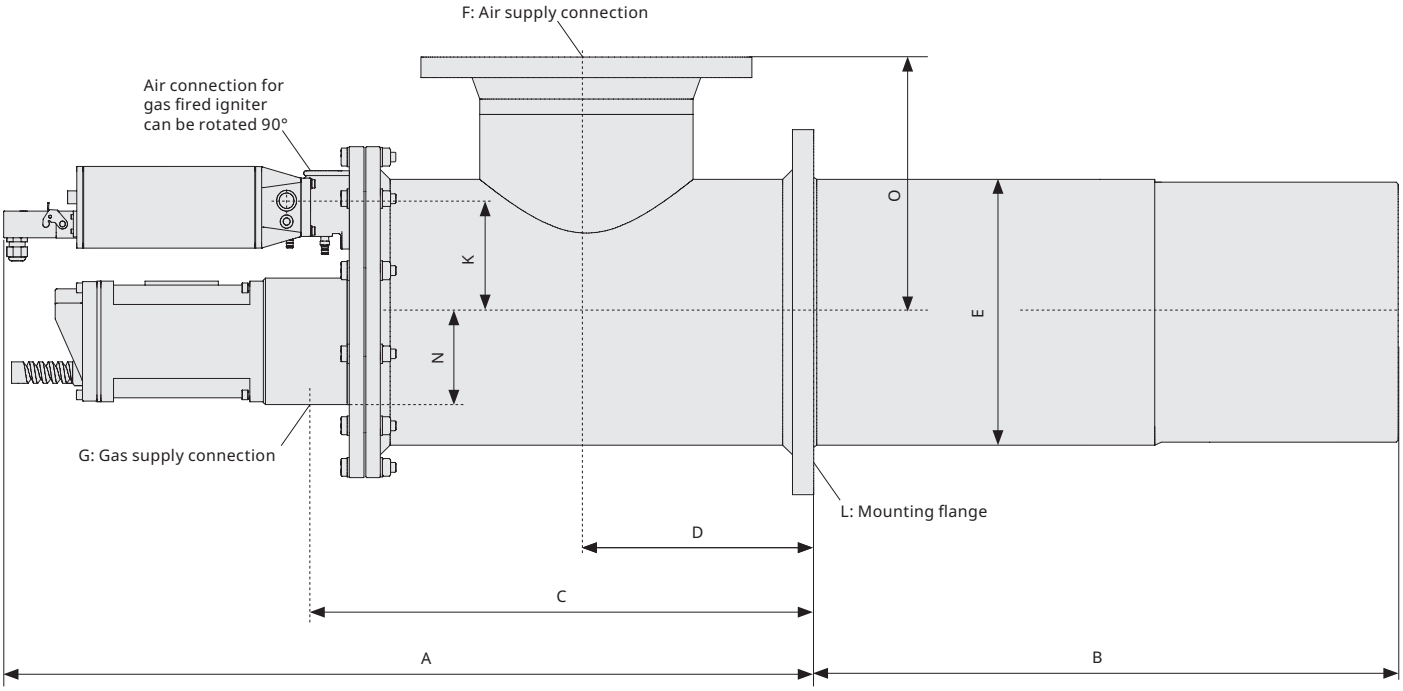

DURAG GROUP

Hegwein GmbH

Kornwestheimer Straße 47
70825 Korntal-Münchingen, Germany
Phone +49 7150 3830-0
info@hegwein.durag.com

DURAG.COM

Follow us on LinkedIn

© DURAG GROUP 03/2025 | Subject to change without notice